YILING®

YL系列
抽 液 泵
HD SERIES DRUM PUMP

使用说明书
Instruction Manual

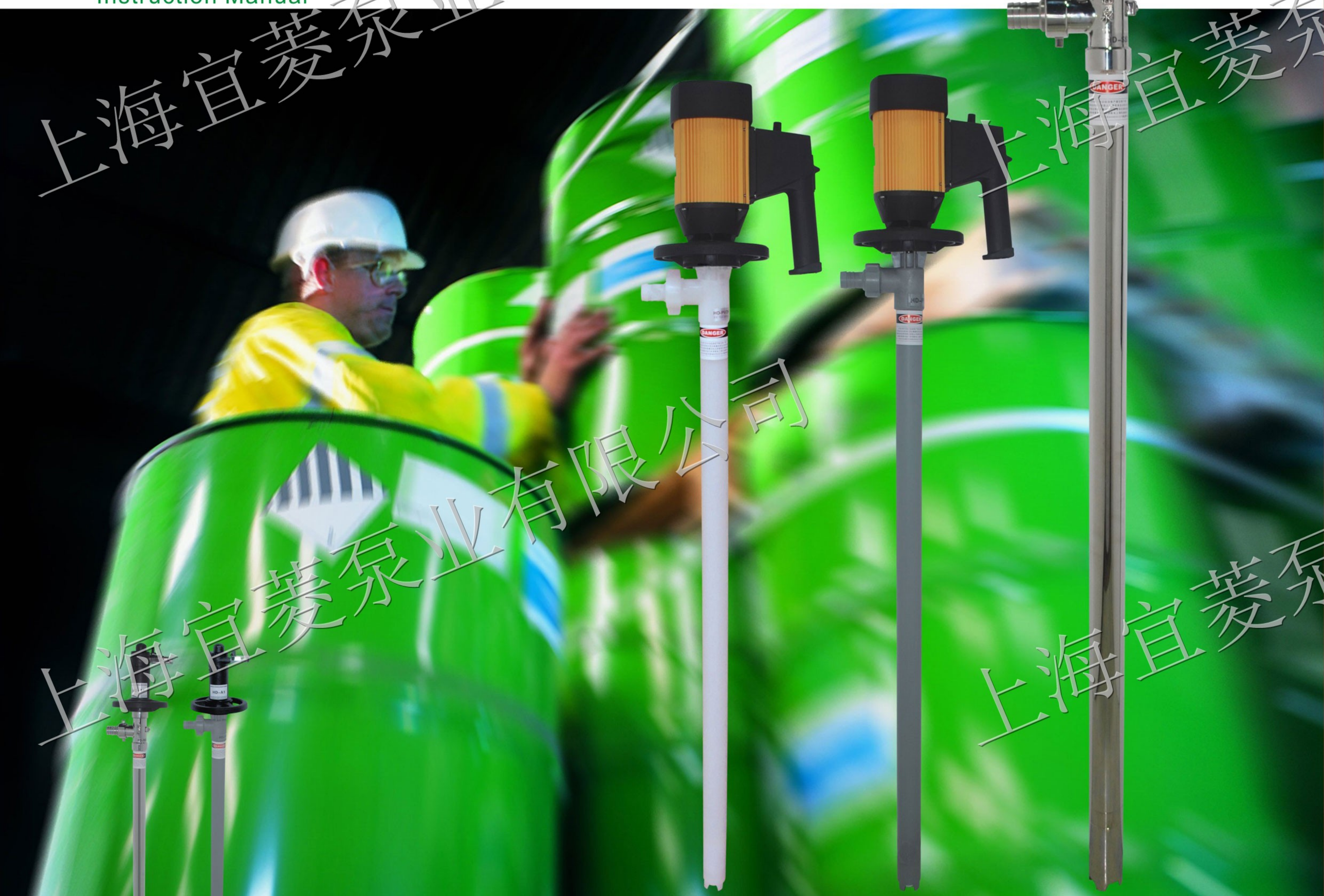

上海宜菱泵业有限公司
SHANGHAI YILING PUMP LTD,. CO.

电机型号字母意义 MOTOR MODEL NUMBER KEY

YL - E 2-V

品名 Name	型号 Type		电压 Voltage
高效桶泵 High-performance Drum	E	无极调速电机(Variable speed control motor)	220V
	EX(SB-3)	固定高速防爆电机(EX motor)	220V
	A1	气动马达(Air motor)	1＝1/2HP 375W
	SB-550W	固定高速电机(Electronic motor)	220V
	SB-880W	固定高速电机(Electronic motor)	220V
	SB-1100W	固定高速电机(Electronic motor)	220V

YL调速电机及气动马达 YL Variable Speed Control Pneumatic Motor

型号 Model	电压 Voltage	转速 Speed	频率 Hertz	功率 Power
YL	1 ϕ 220V	0-~10000	50-60Hz	800W
YL-EX	1 ϕ 220V	12000	50-60Hz	880W
YL -A1		0~10000	3~7 bar	375W
SB-550W	1 ϕ 220V	8000	50-60Hz	550W
SB-880W	1 ϕ 220V	10000	50-60Hz	880W
SB-1100W	1 ϕ 220V	10000	50-60Hz	1100W

泵型号字母意义 PUMP MODEL NUMBER KEY

实例 Example: HD-SS304-1000(high volume/material:SS304)
HD-PPHT-1000-HP(high pressure/material:PPHT)

YL - SS 1000 - HH

品名 Name	材质 Material		长度 Length	型号 Type
高效桶泵 High-performance Drum	304不锈钢	SS 304	700:700mm(27")	HH:高扬程 High Pressure
	二氟	PVDF	1000:1000mm(39")	HV:大流量(不标) High Volume (Do not bid)
	塑料	PPHT	1200:1200mm(47")	HV:高粘度 High Viscosity
	316L不锈钢	SS316L	1500:1500mm(60")	3A:3A卫生级 3A Sanitary Standard
	铝合金	AL	1800:1800mm(72")	
	铁氟龙	PTFE		

如有疑义请联系最近经销商
Any questions, please contact your nearest distributor

优点及特性说明 FEATURES

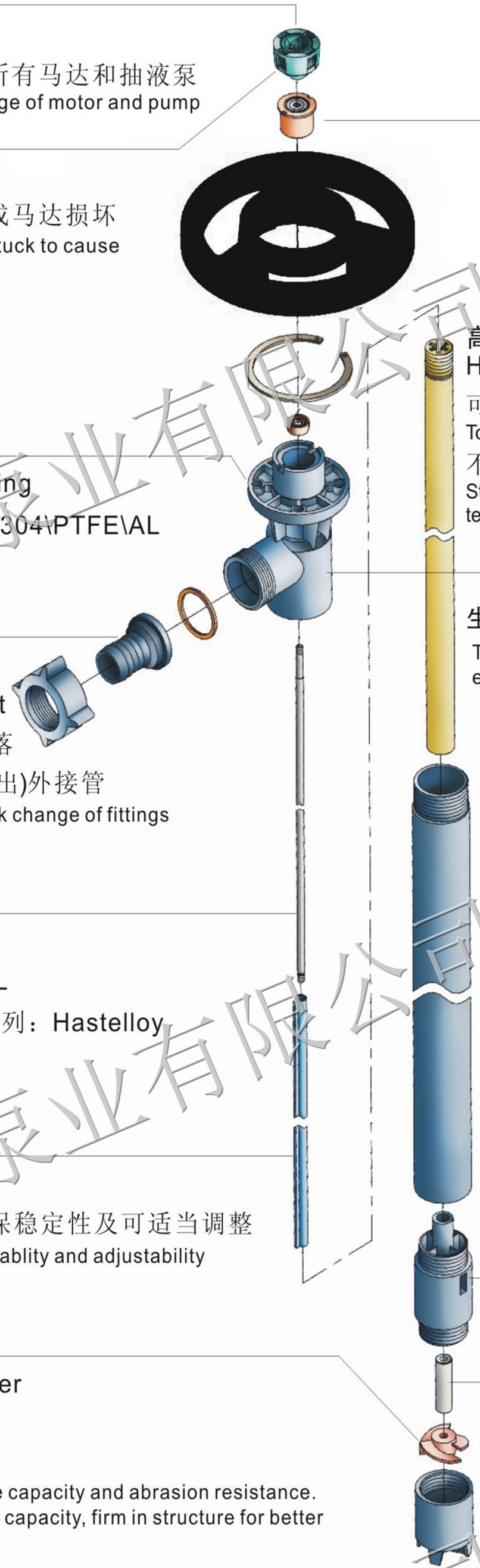

标准的设计
Compact Design

可快速、容易连接交换所有马达和抽液泵
Fast strip down for quick change of motor and pump

安全性连轴器
Safety Coupling

有效防止主轴卡死，造成马达损坏
Effectively prevent shaft got stuck to cause motor damage

三通泵头轴承座
T Type pump head bearing

PPHT\PVDF\SUS316L\304\PTFE\AL

安全性插管式出液口
Safety bayonet-tube outlet

锯齿状束节设计不易滑落
可安全及有效的移动(拔出)外接管
Spiral design for safe and quick change of fittings

主轴
High quality shaft

AL、SS 系列：SUS316L
PPHT、PVDF、PTFE系列：Hastelloy

套管TEF®
TEF Sleeve

被固定于内管内，可确保稳定性及可适当调整
Being fixed in tube to ensure stablity and adjustability

叶轮KYANR®PVDF
High perfcenance impeler

有效提升泵浦输送量
坚固结构增加耐磨性
Rodust construction to improve capacity and abrasion resistance.
Efficiently improve the delivery capacity, firm in structure for better abrasion resistance

高性能轴承组
High performance Bearing Sets

可降低马达输送动力对耗损提升泵浦性能
To reduce power consumption for better performance
不锈钢材质防酸氯腐蚀耐高温
Stainless steel for acid chloride corrosion resistance and high temperature application.

生产商注册商标凸铸LOGO设计确保产品纯正。
The logo of the manufacturer's registered trademark ensures authenticity of products.

快拆式螺牙设计(管轴套座)
Threaded Design (Carbon brush housing)

不需任何工具即可轻松维修保养可快速更换叶片泵浦外壳、精确调整更换之零件。
Easy maintenance without any additional tools required.Quick change of impeller and housing.

轴套
Shaft Bushing

耐酸碱如龙材质
Rulon®not only for better acid and alk resistance, but also high wear resista and low friction.

各种叶片式抽液泵皆采用无轴封设计，可耐空转30分钟以上。
All vane drum pumps are of none-shaft seal design, which allows blank run up to 30 minutes.

YL系列抽液泵 | YL Series Drum Pump

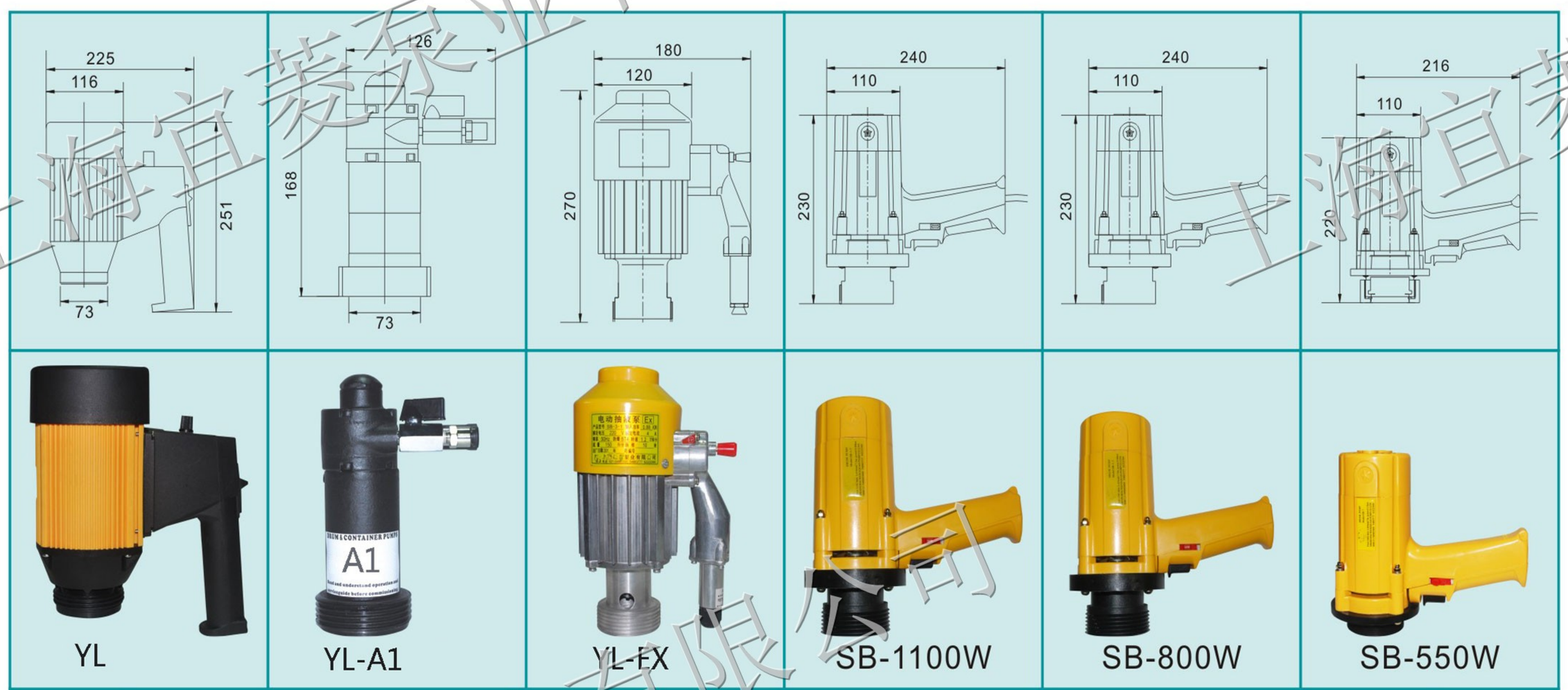

可快速、容易连接
交换所有马达和抽液泵
Quick change of motor and pump

互换

例：YL-PPHT-1000

抽液泵材质应用范围 MATERIAL APPLICATION SCOPE OF DRUM PUMP

泵浦材质 Pump material	最高耐温 Max.Temp.	应用范围 Application scope	
PPHT (玻纤增强聚丙烯) (Fiberglass reinforced PP)	80℃/175°F	酸性和碱性物质如：醋酸、铵、氯化铁、氟圭酸、氢氧化物、消毒剂、磷酸(45%)、氮酸(20%)、钠氢氧化物、硫磺酸(75%)、漂白水及其它液体。 Acid and alkaline substances, like acetic acid, ammonium, iron chloride, fluosilicic acid, hydroxide, disinfectors, phosphoric acid (45%), nitric acid (20%), sodium hydroxide, sulfuric acid (75%), bleaching water and other liquids.	• Acetic Acid • Sulfuric Acid • Hydrochloric-20% • Nitric Acid-20% • Alkalies • Ferric Chloride
PVDF	100℃/212°F	高腐蚀性毒性物质如：氢氟酸(浓度COLD)、氨酸(浓缩)、丙酸、硬脂酸、硫磺酸及其它溶液。 Highly corrosive and toxic substances, like hydrofluoric acid (concentration COLD), propylhomoserin (concentrated), propanoic acid, stearic acid, sulfuric acid and other solutions.	• Concentrated Nitric Acid • Sulfuric Acid-66 Baume • Sodium Hypochlorite • Propionic Acid • Stearic Acid • Hydrofluoric Acid
PTFE	110℃/230°F	任意浓度的硫酸、盐酸、磷酸、氢氟酸、氢氧化钠、氢氧化钾、铬酸、王水、甲酸、醋酸、丙酸、丁酸、硝酸、甲烷、乙烷及各种苯、醇、醚、丙酮、环己酮、酯类、氟乙烯。 Any concentration of sulphuric acid, hydrochloric acid, phosphoric acid, hydrofluoric acid, sodium hydroxide, potassium hydroxide, chromic acid, aqua regia, methanoic acid, acetic acid, propanoic acid, butyric acid, nitric acid, methane, ethane and different kinds of benzene, alcohol, ether, acetone, cyclohexanone, esters and vinyl fluoride.	• Sulfuric acid • Hydrochloric acid • Phosphoric acid • Hydrofluoric acid • Sodium hydroxide • Chromic acid • Aqua regia • Formic acid • Methane • Benzene • Alcohol • Acetone • Ester
SS304	100℃/212°F	可燃性物质或易燃性物质柴油、汽油、各种油类、和缓剂(界面活性剂)、酒精。 Flammable or inflammable substances, diesel oil, gasoline, all kinds of oil, inhibiting agents (interfacial active agents) and alcohol.	• Alcohol • Gasoline • Aqueous Ammonia • Isopropyl Ether • Solvents • Petoleum Products
SS316L	100℃/212°F	可燃性物质或易燃性物质柴油、汽油、各种油类、和缓剂(界面活性剂)、酒精。 各种食品类、饮料类、医用类、高纯净度轻质流体 Flammable or inflammable substances, diesel oil, gasoline, all kinds of oil, inhibiting agents (interfacial active agents) and alcohol. All kinds of food, beverage, medicine and high-purity light-duty fluids.	• Alcohol • Gasoline • Aqueous Ammonia • Isopropyl Ether • Solvents • Petoleum Products
AL	100℃/212°F	低腐蚀性的污水、柴油、低粘度油、润滑油 Weakly corrosive sewage, diesel oil, low-viscosity oil and lubricating oil	• Sewage • Diesel oil • Low viscosity oil • Lubricating oil

⚠ 输送液体如为溶剂时，必须采用防爆电机或气动马达，同时接上接地线，以确保使用之安全。
If the service is solvent, it's necessary to adopt an explosion-proof or pneumatic motor and meanwhile connect the ground wire to ensure safe use.

气动马达、电机系列 ARIABLE SPEED CONTROL MOTOR

YL 调速电动马达

型号 Type	YL
流量 Flow	最大(Max.)165L HH型最大(Max.)100L/min
扬程 Head	最高(Highest)10M HH型最高(Highest)30M
转速 Speed	0~10000(r/min)
功率 Power	800W
粘度 Viscosity	800CPS,HH型1000CPS
重量 Weight	3.55Kg

空转保护装置 Idle protector
安全手动重换装置 Safe manual change device
注塑德国黄聚碳外壳马达可抗化学腐蚀
Jet molding German yellow polycarbonate casing motor, resistant to chemical corrosion
220V 调速电机–附16尺(5米)SJT电线插头
220V speed control motor – included with 16 chi (5m) SJT wire plug
防护等级 Protection class：IP44

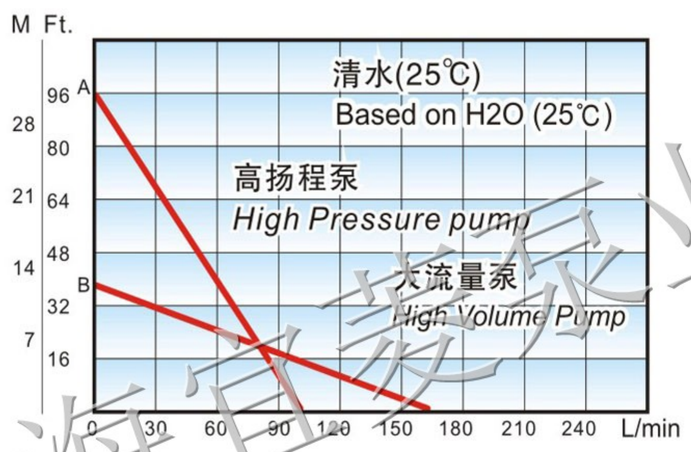

A线为HH高扬程封闭式叶轮,B线为大流量开式叶轮
测试条件：200L圆桶， YL–SS316L–1000泵管，介质为25℃清水，出液口为1 1/4(32mm),测试允许误差±10%
Line A refers to HP high-lift enclosed impeller,Line B refers to large-flow open impeller
Testing conditions: 200L round barrel, YL -SS316L-1000 pump pipe, medium 25℃ clear water, liquid outlet 11/4 (32mm), and allowable error of test ±10%

YL–A1防爆气动马达

型号 Type	YL-AI
流量 Flow	最大(Max.)150L(7bar) HH型最大(Max.)80L/min 最大(Max.)120L(4bar) HH型最大(Max.)60L/min
扬程 Head	最高(Highest)10M(7bar) HH型最高(Highest)16M 最高(Highest)8M(4bar) HH型最高(Highest)13M
转速 Speed	0~10000(r/min)
功率 Power	375W
粘度 Viscosity	700CPS
重量 Weight	1.23Kg

最大入口压力 Max. Inlet air pressure：102 psi(7bar)
空气耗气量 Air consumption：22CFM@92psi(10.38liter/sec@6.3bar)
空气接头 Air joint：8mm
附件Accessory：消音器、气量调节阀 muffler and air flow control valve
必须配备：空气过滤器、压力调节器、自动注油壶(气动3联件)
Required parts: air filter, pressure regulator and automatic oiler (pneumatic triplex)
主体 Body：铸铁、铝合金 Cast iron and aluminum alloy

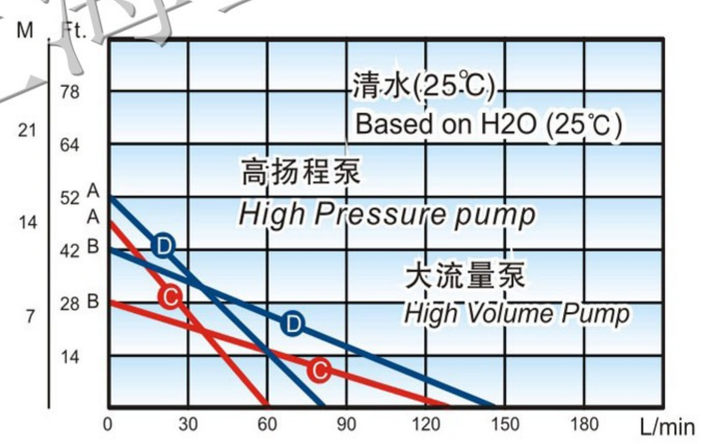

A(D)线为HH高扬程封闭式叶轮(7Bar),A(C)线为HH高扬程封闭式叶轮(4Bar),B(D)线为大流量开式叶轮(7Bar),B(C)线为大流量开式叶轮(4Bar)
测试条件：200L圆桶， YL–SS316L–1000泵管，介质为25℃清水，出液口为1 1/4(32mm),测试允许误差±10%
Line A(D) refers to HP high-lift enclosed impeller(7Bar),Line A(C) refers to HP high-lift enclosed impeller(4Bar) Line B(D) refers to large-flow open impeller(7Bar),Line B(C) refers to large-flow open impeller(4Bar)
Testing conditions: 200L round barrel,YL-SS316L-1000 pump pipe, medium 25℃ clear water, liquid outlet 11/4 (32mm), and allowable error of test ±10%

气动马达、电机系列 ARIABLE SPEED CONTROL MOTOR

YL-EX(SB-3)防爆电机

型号 Type	YL-EX(SB-3)
流量 Flow	最大(Max.)198L HH型最大(Max.)120L/min
扬程 Head	最高(Highest)12M HH型最高(Highest)30M
转速 Speed	12000(r/min)
功率 Power	880W
粘度 Viscosity	500CPS,HH型800CPS
重量 Weight	4.4Kg

全封闭式铝合金外壳 Totally enclosed aluminum alloy casing
220V 防爆电机–附3米出线，不含防爆插头
220V explosion–proof motor – included with a 3m outgoing line, without an explosion–proof plug
防护等级 Protection class：IP55
防爆等级 Explosive–proof class：dⅡBT4

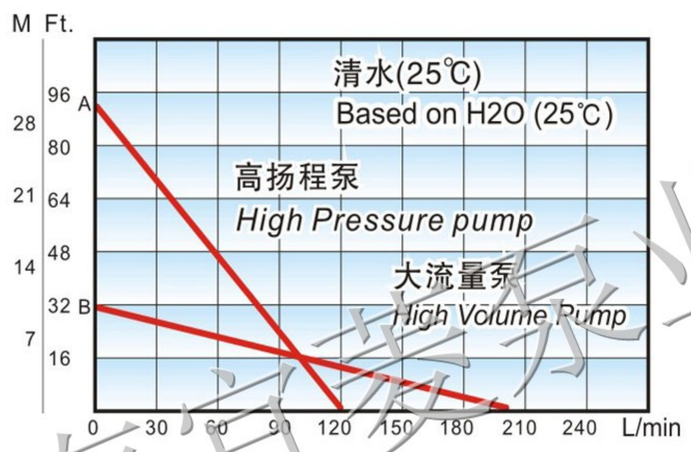

A线为HH高扬程封闭式叶轮,B线为大流量开式叶轮
测试条件：200L圆桶， YL–SS316L–1000泵管，介质为25℃清水，出液口为1 1/4(32mm),测试允许误差±10%
Line A refers to HP high-lift enclosed impeller,Line B refers to large-flow open impeller
Testing conditions: 200L round barrel, YL-SS316L-1000 pump pipe, medium 25℃ clear water, liquid outlet 11/4 (32mm), and allowable error of test ±10%

SB–1100W固定高速电机

型号 Type	SB-1100W
流量 Flow	最大(Max.)180L HH型最大(Max.)110L/min
扬程 Head	最高(Highest)11M HH型最高(Highest)30M
转速 Speed	10000(r/min)
功率 Power	1100W
粘度 Viscosity	500CPS,HH型800CPS
重量 Weight	3.38Kg

注塑德国黄聚碳外壳马达可抗化学腐蚀
Jet molding German yellow polycarbonate casing motor, resistant to chemical corrosion
220V 高速电机–附3米电线插头
220V high–speed motor – included with a 3m wire plug
防护等级 Protection class：IP20
绝缘等级 Insulation class：E级

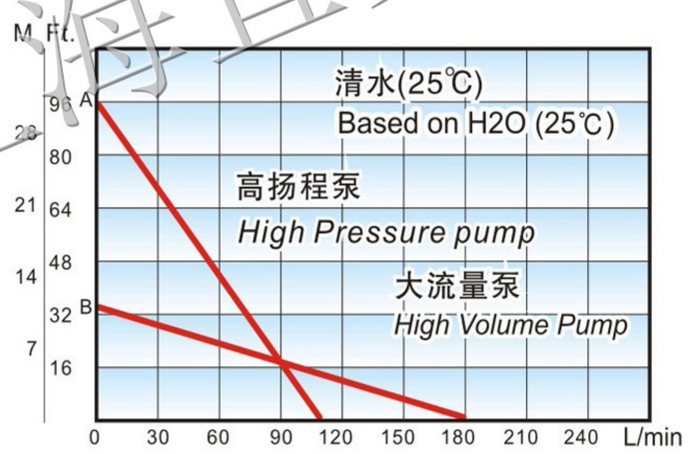

A线为HH高扬程封闭式叶轮,B线为大流量开式叶轮
测试条件：200L圆桶， YL–SS316L–1000泵管，介质为25℃清水，出液口为1 1/4(32mm),测试允许误差±10%
Line A refers to HP high-lift enclosed impeller,Line B refers to large-flow open impeller
Testing conditions: 200L round barrel, YL-SS316L-1000 pump pipe, medium 25℃ clear water, liquid outlet 11/4 (32mm), and allowable error of test ±10%

气动马达、电机系列 ARIABLE SPEED CONTROL MOTOR

SB-880W固定高速电机

型号 Type	SB-880W
流量 Flow	最大(Max.)170L HH型最大(Max.)105L/min
扬程 Head	最高(Highest)10M HH型最高(Highest)29M
转速 Speed	10000(r/min)
功率 Power	880W
粘度 Viscosity	500CPS,HH型800CPS
重量 Weight	3.3Kg

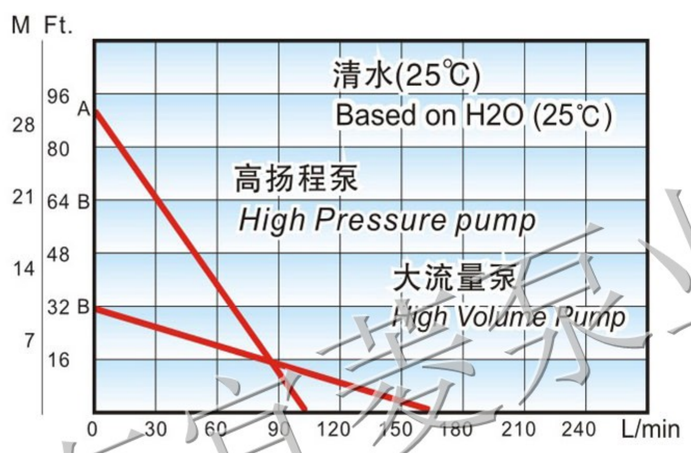

注塑德国黄聚碳外壳马达可抗化学腐蚀
Jet molding German yellow polycarbonate casing motor, resistant to chemical corrosion
220V 高速电机–附3米电线插头
220V high–speed motor – included with a 3m wire plug
防护等级 Protection class：IP20
绝缘等级 Insulation class：E级

A线为HH高扬程封闭式叶轮,B线为大流量开式叶轮
测试条件：200L圆桶，YL –SS316L–1000泵管，介质为25℃清水，出液口为1 1/4(32mm),测试允许误差 ±10%
Line A refers to HP high-lift enclosed impeller,Line B refers to large-flow open impeller
Testing conditions: 200L round barrel, YL-SS316L-1000 pump pipe, medium 25℃ clear water, liquid outlet 11/4 (32mm), and allowable error of test ±10%

SB-550W固定高速电机

型号 Type	SB-550W
流量 Flow	最大(Max.)120L HH型最大(Max.)70L/min
扬程 Head	最高(Highest)8M HH型最高(Highest)22M
转速 Speed	8000(r/min)
功率 Power	550W
粘度 Viscosity	500CPS,HH型800CPS
重量 Weight	2.3Kg

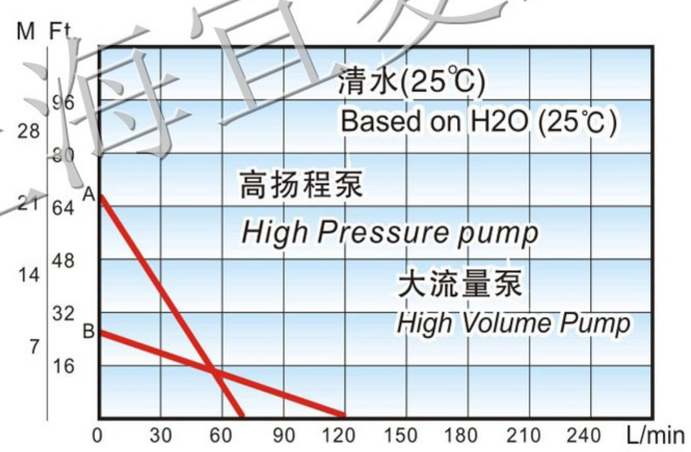

注塑德国黄聚碳外壳马达可抗化学腐蚀
Jet molding German yellow polycarbonate casing motor, resistant to chemical corrosion
220V 高速电机–附3米电线插头
220V high–speed motor – included with a 3m wire plug
防护等级 Protection class：IP20
绝缘等级 Insulation class：E级

A线为HH高扬程封闭式叶轮,B线为大流量开式叶轮
测试条件：200L圆桶，YL –SS316L–1000泵管，介质为25℃清水，出液口为1 1/4(32mm),测试允许误差 ±10%
Line A refers to HP high-lift enclosed impeller,Line B refers to large-flow open impeller
Testing conditions: 200L round barrel, YL-SS316L-1000 pump pipe, medium 25℃ clear water, liquid outlet 11/4 (32mm), and allowable error of test ±10%

订货前应注意事项/到货检查 NOTES BEFORE ORDER/ARRIVAL CHECK

在操作抽液泵之前，操作人员应了解对于使用之液体相关化学特性与材质适用条件范围，并详读所有操作注意事项和安全警告标示。

Before operating a liquid pump, the operator shall know chemical properties related to the working liquid and applicable conditions and scopes of materials, and also read all operation notes and safety warning signs in details.

订购抽液泵应注意事项

一、抽液泵依不同材质有不同的条件及应用范围，订购抽液泵前应考虑以下因素；
1.液体化学特性(PUMP泵体及主轴材质耐抗性)，2.流量(l/min)，3.扬程(m)
4.温度(℃)，5.粘度(cps)，6.通过粒径(mm)，7.比重(kg/m^3)

二、确认使用电源、接管方式及相关作业环境。

三、出口可选择标准配备1"(25.4mm)或特殊规格3/4"(22mm)，1 1/4"(32mm)

NOTES FOR ORDERING LIQUID PUMP

I. The liquid pumps have different conditions and application scopes in accordance with different materials, and the following factors shall be taken into consideration before ordering liquid pumps.
1. The liquid's chemical properties (resistance of materials of the pump's body and main shaft); 2. flow (l/min); 3. lift head (m);
4. temperature (℃); 5. viscosity (cps); 6. diameter of passing grain (mm); 7. specific gravity (kg/m3)

II. Confirm working power supply, pipe connection mode and relevant working environment.

III. The outlet is optional for the standard size 1" (25.4mm) or special sizes 3/4" (22mm) and 11/4" (32mm)

抽液泵尺寸应用范围 DIMENSION APPLICATION SCOPE OF DRUM PUMP

适用容器 Applicable containers	泵浦型号 Pump type	泵浦管长度 Pump pipe length
5加仑瓶 5GAL Bottles	YL·材质 material 700	700mm(27')
55加仑标准鼓圆桶 (200L) 55 Gal. standard drum barrels (200L)	YL·材质 material 1000	1000mm(39')
桶罐、罐子槽体 Drums, jars and tanks	YL·材质 material 1200	1200mm(47')
国际标准吨桶 International standard packaging barrel	YL·材质 material 1500	1500mm(60')
大型容器 Big containers	YL·材质 material 1800	1800mm(72')

货到检查

一、请检查铭牌，确认是否为您所订购之抽液泵。

二、请检查电机(或气动马达)、泵管有无任何损坏及异常情况。

三、请确定电机及抽液泵所有螺丝、零件是否皆已锁紧、固定。

ARRIVAL CHECK

I. Please check the nameplate to confirm whether it's the pump that you've ordered.

II. Please check whether the motor (or pneumatic motor) and the pump pipe have any damages or abnormalities.

III. Please confirm whether all screws and parts of the motor and the liquid pump have been locked and fixed.

操作说明及注意事项 OPERATING INSTRUCTIONS AND NOTES

一、请先检查扶手轮及出口管路是否锁紧。
二、叶轮容许通颗粒3mm以下之软性物质，若超过此粒径请另行加装过滤网。
三、泵机勿存放在潮湿或酸气、热气及各种腐蚀性气体过重处。
四、电机、气动马达及抽液泵严禁碰撞损坏。
五、YL-A系列气动马达机型，运行中必须加装带自动添油型气动三联件(除水过滤、润滑、压力调整)。
注：润滑油采用ISO VG32涡轮机油(俗称1#透平油)
六、请将抽液泵管及出口管路放至指定安全区域后再开启电(气)源。
七、使用电(气)源时，请由小到大启动，以延长泵机运转时间及寿命，亦防止人员危险。
八、注意电压是否正确或供气压力和产气量是否满足。
九、调速电机均有过载保护装置。(其它泵型建议在电源进线端加设过载保护器)
十、使用时，必须有专业人员现场操作，运行过程中人员切勿离开现场。
十一、一般桶装手提式抽液泵可抽取之粘度约为800cps；高扬程叶轮粘度可达1000cps，如需输送更高粘度液体，请选用高粘度螺旋式抽液泵或是其它适用抽液泵（例：FY气动浆料泵、RW气动隔膜泵、ZB转子泵、CG螺杆泵）。
十二、如发现泵机有异声时，请检查是否吸入异物与叶轮碰撞。
十三、输送液体如为溶剂时，需采用防爆型电机或气动马达，同时接上接地线，以确保使用上安全。
十四、电机或气动马达与泵管安装时请确实，如安装不当，会造成电机马达连轴器与泵管连轴器损毁。
十五、电机或气动马达与泵管安装前，请先确认开关为关闭OFF状态。
十六、电机或气动马达请勿浸入液体中或泼到液体。
十七、YL系列抽液泵应在海拔1000米以下使用。

I. Please check first whether the handwheel and the outlet pipeline are locked.
II. The impeller allows passing of soft substances with diameter below 3mm, and if beyond that diameter, please mount a filter screen additionally.
III. Don't store the pump in any place with excessive moisture or acid, hot or corrosive gases.
IV. It's strictly prohibited to knock and damage the motor, the pneumatic motor and the drum pump.
V. YL -A series pneumatic motor type in HD-A series must be mounted additionally with an automatic pneumatic oiling triplex (water removal and filtration, lubrication and pressure regulation).Note: the lubricating oil adopts ISO VG32 turbine oil (informally called 1# turbine oil)
VI. Please place the liquid pump pipe and the outlet pipeline in a designated safe area before staring the power (gas) supply.
VII. When using the power (gas) supply, please start it gradually to extend the pump's service time and life and also protect personnel from dangers.
VIII. Note whether the voltage is accurate or whether the supply gas pressure and the gas production are met.
IX. All speed control motors are provided with an overload protector (for other pump types, it's recommended to mount an overload protector additionally at the power lead end).
X. Professionals must be available for its field operation and during its running they shall by no means leave the field.
XI. A common drum portable liquid pump can pump liquids with viscosity about 800cps; and up to 1,000cps for a high-lift impeller; if required to transport liquids with higher viscosity, please choose a high-viscosity spiral liquid pump or other applicable liquid pumps (such as: FY pneumatic slurry pump, RW pneumatic diaphragm pump, ZB rotor pump and CG screw pump).
XII. If any abnormal noise of the pump is found, please check whether foreign matters are pumped inside to knock against the impeller.
XIII. If the working liquid is a solvent, it's necessary to adopt an explosion-proof or pneumatic motor and meanwhile connect the ground wire to ensure safe use.
XIV. Please make sure the electric or pneumatic motor is installed on the pump pipe well because improper installation may result in damages to the couplings of the motor and the pump pipe.
XV. Before installing the electric or pneumatic motor on the pump pipe, please confirm first that the switch is off.
XVI. Please don't immerse the electric or pneumatic motor into liquids or splash liquids on it.
XVII. YL series liquid pump shall be used at an elevation below 1,000m.

抽液泵安装示意图 DRUM PUMP SUGGESTED INSTALLATION

输送液体如为溶剂等挥发性易燃易爆介质，需配置防爆电机或防爆气动马达，同时必须接上接地线，以确保使用上安全；如疏忽接地线时，可能会导致静电而造成火灾、伤害甚至死亡。如果仍有疑义，使用前请先洽生产商或经销商。

For safety, please properly bond and ground when handling solvent or flam-mable fluids as a static electric discharge could result in fire, explosion,injury or death. Do not start the pump in case of any doubt, and contact with local distributor.

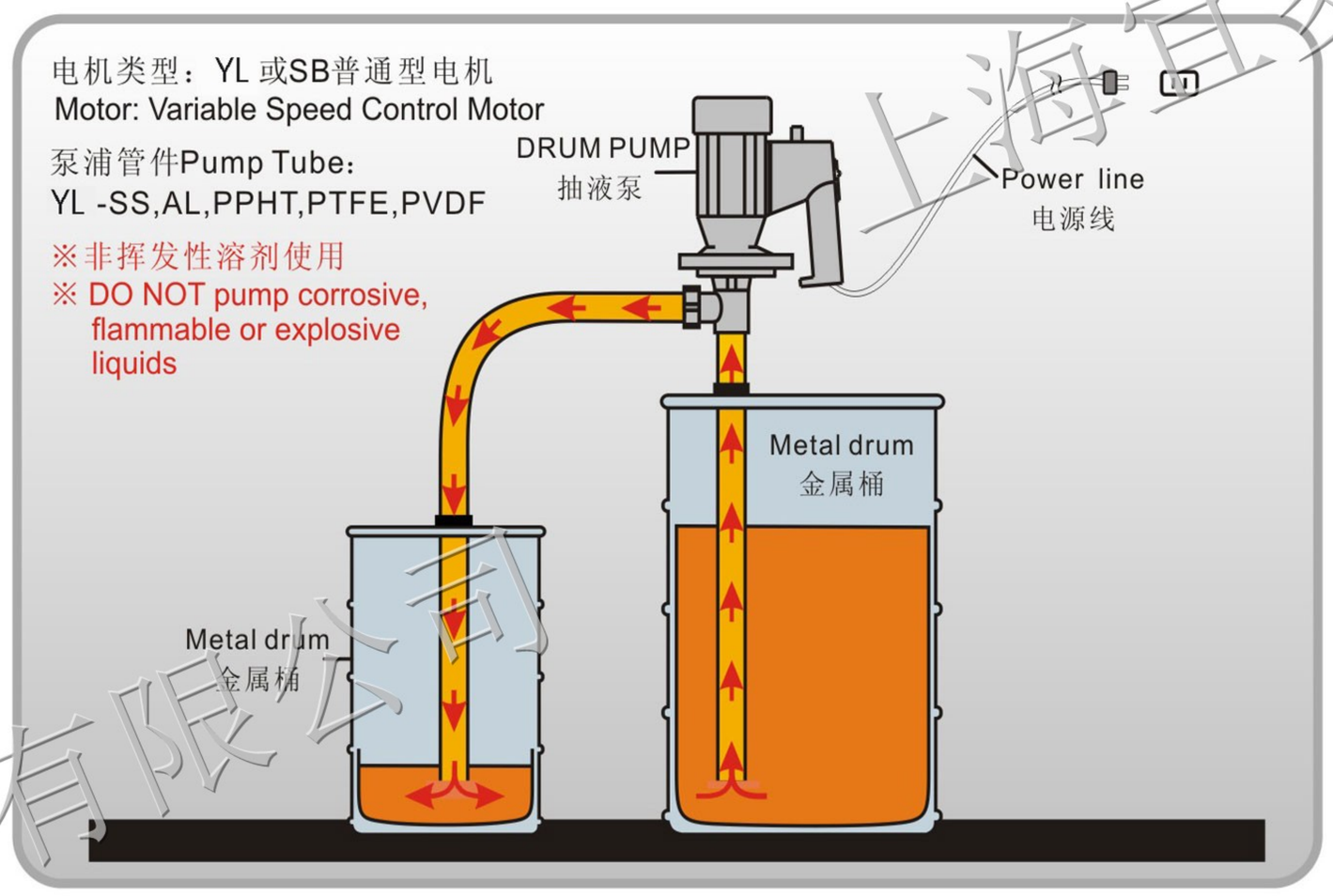

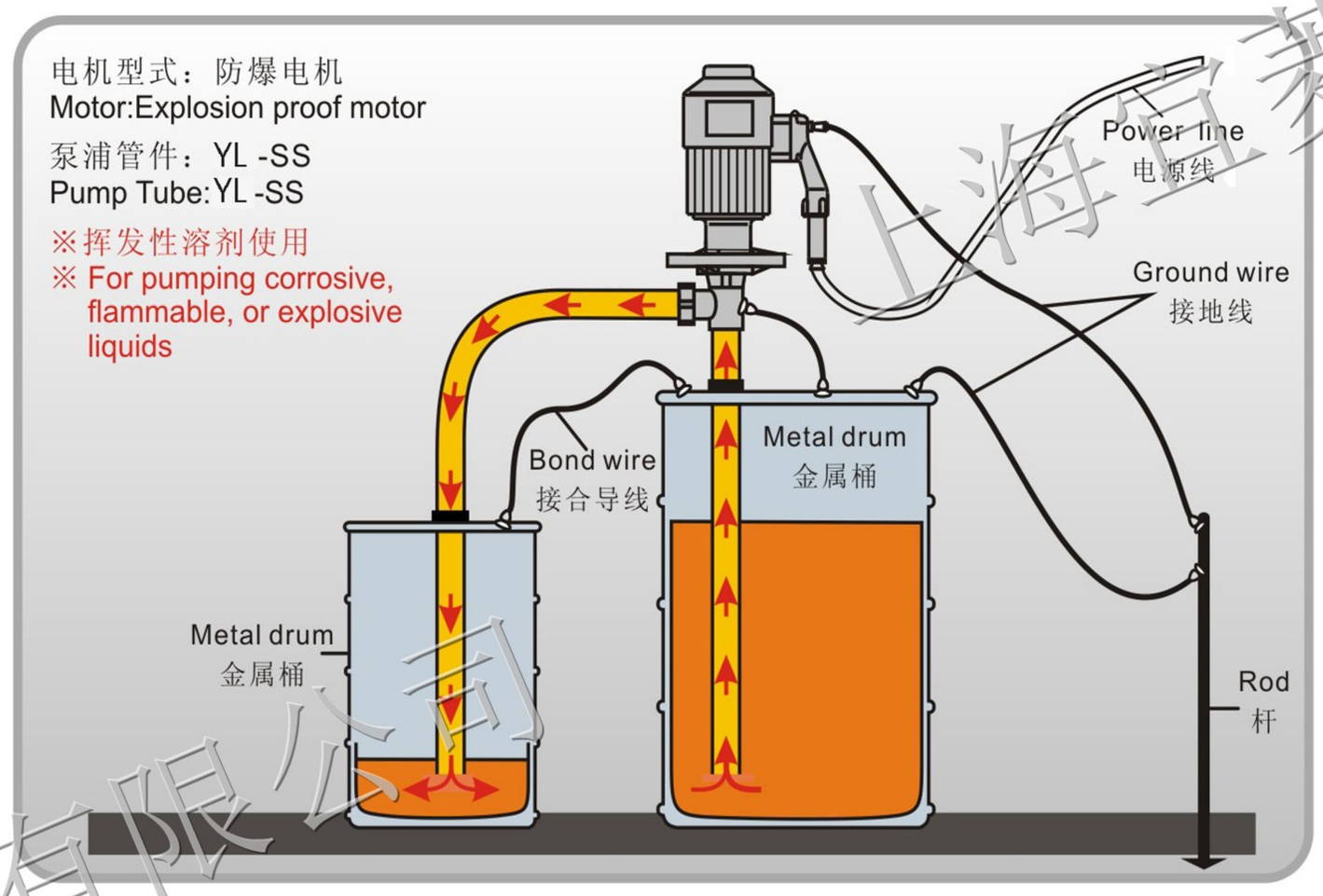

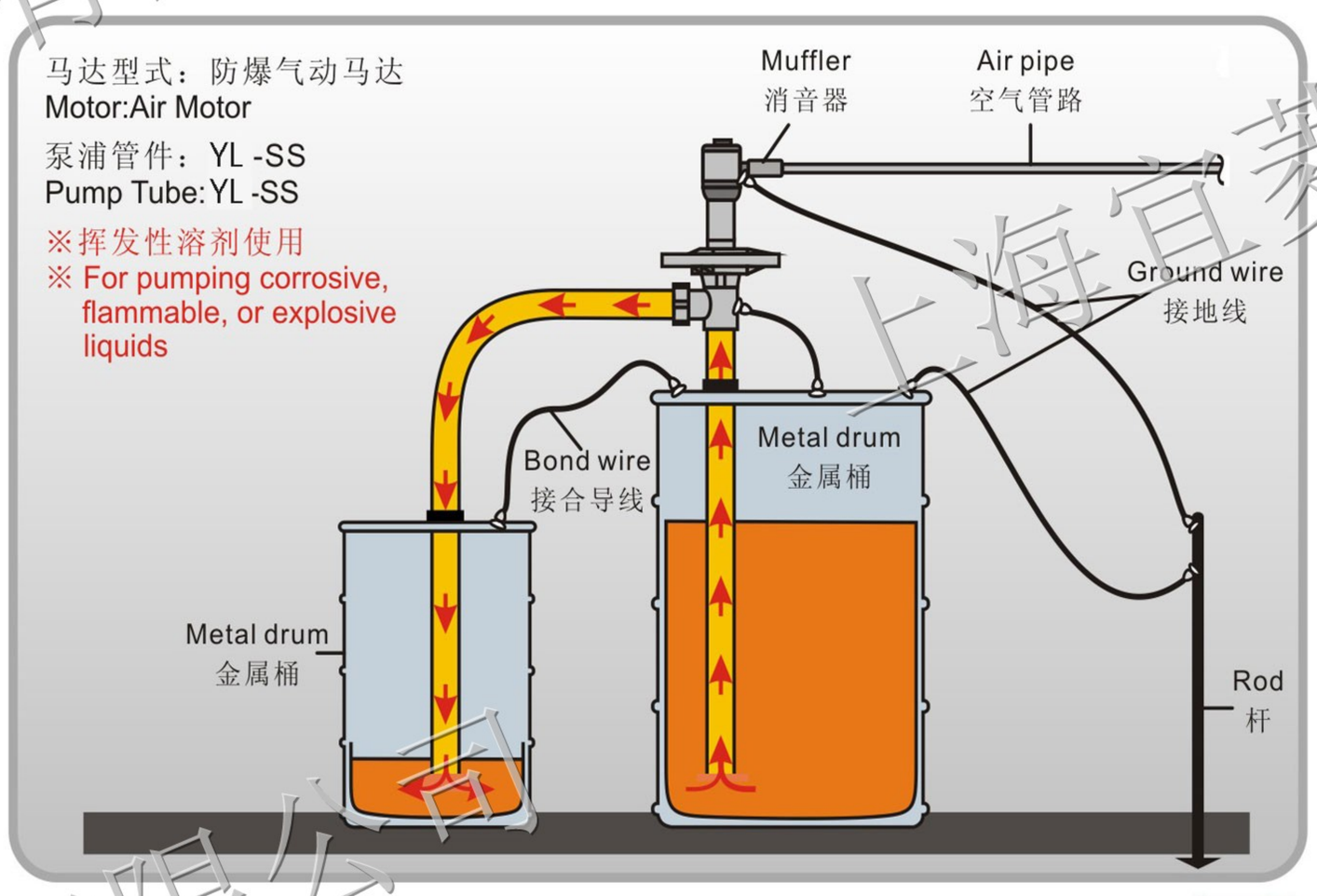

YL-PPHT抽液泵系列 YL-PPHT DRUM PUMP SERIES

型号 Model	长度 Length	材质 Material	中心轴 Shaft	叶轮 Impeller
YL-PPHT-700	700mm(27")	Polypropylene	SS316L/Hastelloy	PVDF 大流量(不标) PVDF High Pressure
YL-PPHT-1000	1000mm(39")			
YL-PPHT-1200	1200mm(47")			
YL-PPHT-1500	1500mm(60")			
YL-PPHT-1800	1800mm(72")			
YL-PPHT-700-HH	700mm(27")	Polypropylene	SS316L/Hastelloy	PVDF 高扬程 PVDF High Pressure
YL-PPHT-1000-HH	1000mm(39")			
YL-PPHT-1200-HH	1200mm(47")			
YL-PPHT-1500-HH	1500mm(60")			
YL-PPHT-1800-HH	1800mm(72")			

最大耐温(Max Temp): 80℃/175°F

粘度(Viscosity):1000Cps/mPas(YL -E)
700Cps/mPas(YL -A1)
500Cps/mPas(YL -EX(SB-3))

最大比重(Max Specific Gravity):1.8

出口选择(Discharge Options):1"(25mm)barb
3/4"(22mm)barb

重量：(weight):1-2kg

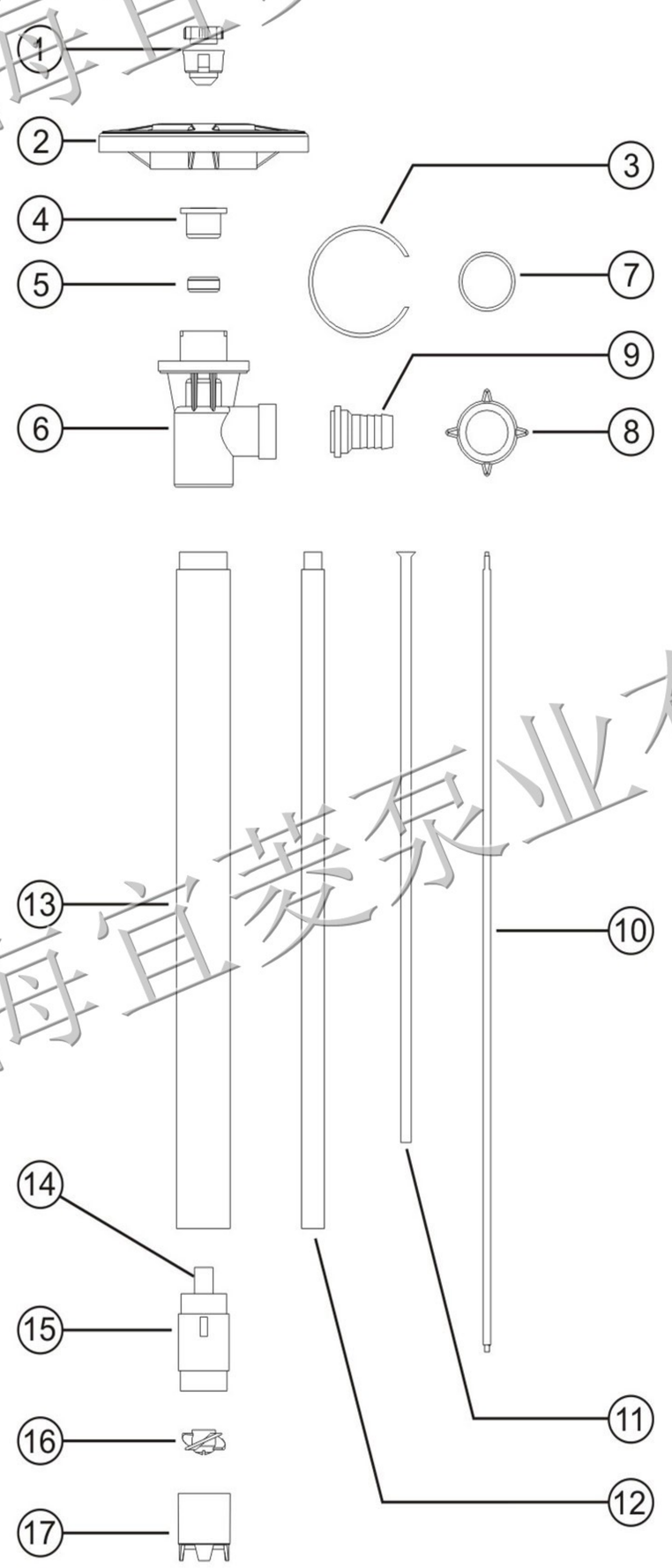

序号 No.	部件名称 Name			配件编号 No.
01	泵联轴器	Pump coupling		810.804
02	扶手轮	Hand wheel		818.842
03	卡环	Snap ring		815.808
04	轴承组	Bearing unit assembled-2		810.838
05	V型油封	V-Seal-VT		840.800
06	三通泵头座	Connection flange		860.828
07	出液口垫片	TEL seal		821.895
08	出液口锁母	Wing nut		861.806
09	出液口管芯	Hose barb,1"		860.882
10	中心轴	Drive shafe	700mm(27")	815.843+L
		(Hastelloy/SS316L)	1000mm(39")	815.844+L
			1200mm(47")	815.845+L
			1500mm(60")	815.846+L
			1800mm(72")	815.847
11	轴套管	Guide sleeve	700mm (27")	815.814
		(FEP)	1000mm(39")	815.815
			1200mm(47")	815.816
			1500mm(60")	815.817
			1800mm(72")	815.818
12	内管	Inner tube	700mm (27")	866.800
		(PP)	1000mm(39")	866.801
			1200mm(47")	866.802
			1500mm(60")	866.815
			1800mm(72")	866.816
13	外管	Outer tube	700mm (27")	866.803
		(PP)	1000mm(39")	866.804
			1200mm(47")	866.805
			1500mm(60")	866.817
			1800mm(72")	866.818
14	轴套	Pure carbon brush		816.806
15	管轴套座	Carbon brush housing		865.824
16	叶轮（开式）	PVDF impeller		846.808
	高扬程叶轮	High pressure impeller		846.808HP
17	底座	Pump foot		816.809
	高扬程泵底座	High pressure pump foot		816.809HP

YL-PVDF抽液泵系列 YL-PVDF DRUM PUMP ERIES

YL 型号 Model	长度 Length	材质 Material	中心轴 Shaft	叶轮 Impeller
YL-PVDF-700	700mm(27")	PVDF	Hastelloy	PVDF大流量(不标) PVDF High Volume
YL-PVDF-1000	1000mm(39")			
YL-PVDF-1200	1200mm(47")			
YL-PVDF-1500	1500mm(60")			
YL-PVDF-1800	1800mm(72")			
YL-PVDF-700-HH	700mm(27")	PVDF	Hastelloy	PVDF高扬程 PVDF High Pressure
YL-PVDF-1000-HH	1000mm(39")			
YL-PVDF-1200-HH	1200mm(47")			
YL-PVDF-1500-HH	1500mm(60")			
YL-PVDF-1800-HH	1800mm(72")			

最大耐温(Max Temp):100℃/212℉

粘度(Viscosity):1000Cps/mPas(YL -E)
700Cps/mPas(YL -A1)
500Cps/mPas(YL -EX(SB-3))

最大比重(Max Specific Gravity):1.8

出口选择(Discharge Options):1"(25mm)barb
3/4"(22mm)barb

重量：(weight):1.2-2.4kg

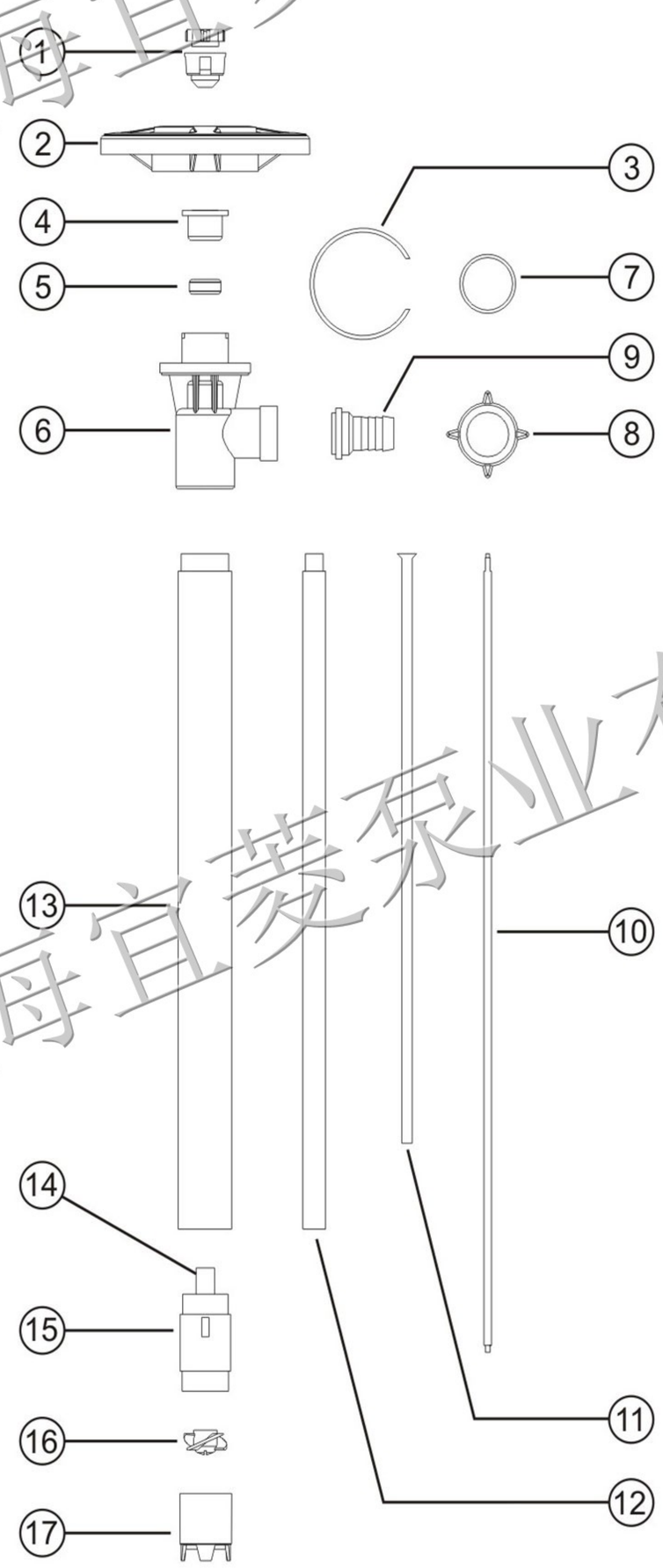

序号 No.	部件名称 Name			配件编号 No.
01	泵联轴器	Pump coupling		810.804
02	扶手轮	Hand wheel		818.842
03	卡环	Snap ring		815.808
04	轴承组	Bearing unit assembled-2		810.838
05	V型油封	V-Seal-VT		840.800
06	三通泵头座	Connection flange		840.728
07	出液口垫片	TEL seal		821.895
08	出液口锁母	Wing nut		841.706
09	出液口管芯	Hose barb,1"		840.882
10	中心轴	Drive shafe	700mm(27")	815.843
		(Hastelloy)	1000mm(39")	815.844
			1200mm(47")	815.845
			1500mm(60")	815.846
			1800mm(72")	815.847
11	轴套管	Guide sleeve	700mm (27")	815.814
		(FEP)	1000mm(39")	815.815
			1200mm(47")	815.816
			1500mm(60")	815.817
			1800mm(72")	815.818
12	内管	Inner tube	700mm (27")	846.300
		(PVDF)	1000mm(39")	846.801
			1200mm(47")	846.802
			1500mm(60")	846.811
			1800mm(72")	846.812
13	外管	Outer tube	700mm (27")	846.803
		(PVDF)	1000mm(39")	846.804
			1200mm(47")	846.805
			1500mm(60")	846.813
			1800mm(72")	846.814
14	轴套	Pure carbon brush		816.806
15	管轴套座	Carbon brush housing		846.807
16	叶轮（开式）	PVDF impeller		846.808
	高扬程叶轮	High pressure impeller		846.808HP
17	底座	Pump foot		846.809
	高扬程泵底座	High pressure pump foot		846.809HP

YL 系列抽液泵 | YL Series Drum Pump

YL-SS抽液泵系列 YL-SS DRUM PUMP SERIES

型号 Model	长度 Length	材质 Material	中心轴 Shaft	叶轮 Impeller
YL-SS304-700(或SS 316L)	700mm(27")	SUS304/ SUS 316L	Stainless 316L	PVDF大流量(不标) PVDFHigh Volume
YL-SS304-1000(或SS 316L)	1000mm(39")			
YL-SS304-1200(或SS 316L)	1200mm(47")			
YL-SS304-1500(或SS 316L)	1500mm(60")			
YL-SS304-1800(或SS 316L)	1800mm(72")			
YL-SS304-700-HH(或SS 316L)	700mm(27")	SUS304/ SUS 316L	Stainless 316L	PVDF 高扬程 PVDF High Pressure
YL-SS304-1000-HH(或SS 316L)	1000mm(39")			
YL-SS304-1200-HH(或SS 316L)	1200mm(47")			
YL-SS304-1500-HH(或SS 316L)	1500mm(60")			
YL-SS304-1800-HH(或SS 316L)	1800mm(72")			

最大耐温(Max Temp):100℃/212℉

粘度(Viscosity):1000Cps/mPas(YL-E)
700Cps/mPas(YL-A1)
500Cps/mPas(YL-EX(SB-3))

最大比重(Max Specific Gravity):1.8

出口选择(Discharge Options):1"(25mm)barb
3/4"(22mm)barb

重量：(weight):3.8-5.8kg

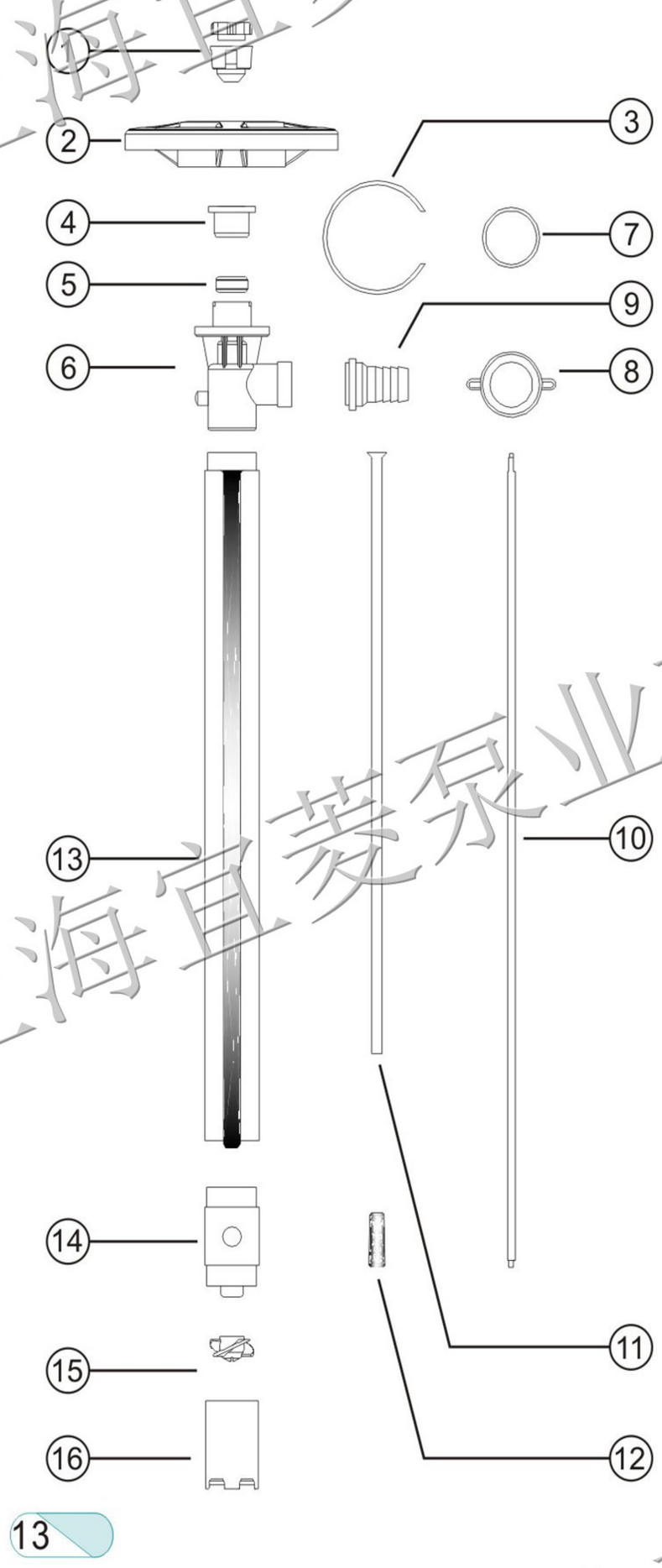

序号 No.	部件名称 Name			配件编号 No.
01	泵联轴器	Pump coupling		810.804
02	扶手轮	Hand wheel		818.842
03	卡环	Snap ring		815.808
04	轴承组	Bearing unit assembled-2		810.838
05	V型油封	V-Seal-VT		840.800
06	三通泵头座	Connection flange (304、316L)		820.800+L
07	出液口垫片	TEL seal		821.895
08	出液口锁母	Wing nut (304、316L)		821.868+L
09	出液口管芯	Hose barb,1" (304、316L)		821.896+L
10	中心轴	Drive shafe	700mm (27")	820.827
		(316L)	1000mm(39")	820.828
			1200mm(47")	820.829
			1500mm(60")	827.809
			1800mm(72")	827.810
11	轴套管	Guide sleeve	700mm (27")	820.831
		(FEP)	1000mm(39")	827.815
			1200mm(47")	820.832
			1500mm(60")	827.811
			1800mm(72")	827.812
12	轴套	Pure carbon brush	纯碳聚合物	816.806
13	内外管	Inner/outer tube assembly	700mm (27")	827.800+L
		(304、316L)	1000mm(39")	827.801+L
			1200mm(47")	827.802+L
			1500mm(60")	827.813+L
			1800mm(72")	827.814+L
14	管轴套座	Carbon brush housing (304、316L)		827.804+L
15	叶轮（开式）	PVDF impeller		827.806
	高扬程叶轮	High pressure impeller		827.806HH
16	底座	Pump foot		827.808+L
	高扬程泵底座	High pressure pump foot		827.808HH+L

YL-PTFE抽液泵系列 YL-PTFE DRUM PUMP SERIES

型号 Model	长度 Length	材质 Material	中心轴 Shaft	叶轮 Impeller
YL-PTFE-700	700mm(27")	PTFE	Hastelloy	PTFE大流量(不标) PTFE High Volume
YL-PTFE-1000	1000mm(39")			
YL-PTFE-1200	1200mm(47")			
YL-PTFE-1500	1500mm(60")			
YL-PTFE-1800	1800mm(72")			
YL-PTFE-700-HH	700mm(27")	PTFE	Hastelloy	PTFE高扬程 PTFE High Pressure
YL-PTFE-1000-HH	1000mm(39")			
YL-PTFE-1200-HH	1200mm(47")			
YL-PTFE-1500-HH	1500mm(60")			
YL-PTFE-1800-HH	1800mm(72")			

最大耐温(Max Temp):110℃/230℉

粘度(Viscosity):1000Cps/mPas(HD-E)
700Cps/mPas(HD-A1)
500Cps/mPas(HD-EX(SB-3))

最大比重(Max Specific Gravity):1.8

出口选择(Discharge Options):1"(25mm)barb
3/4"(22mm)barb

重量：(weight):1.5-3kg

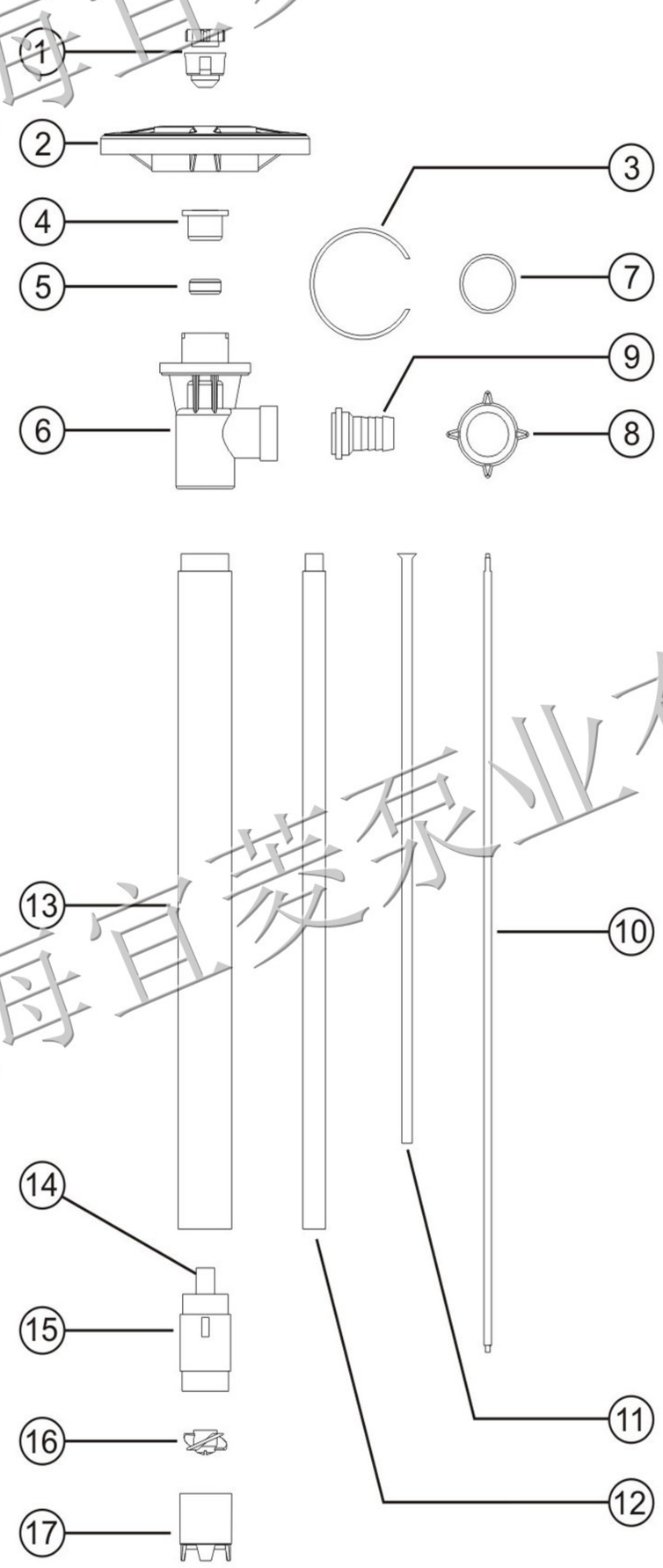

序号 No.	部件名称 Name			配件编号 No.
01	泵联轴器	Pump coupling		810.804
02	扶手轮	Hand wheel		818.842
03	卡环	Snap ring		815.808
04	轴承组	Bearing unit assembled-2		810.838
05	V型油封	V-Seal-VT		840.800
06	三通泵头座	Connection flange		940.728
07	出液口垫片	TEL seal		821.895
08	出液口锁母	Wing nut		941.706
09	出液口管芯	Hose barb,1"		940.882
10	中心轴	Drive shafe	700mm(27")	815.843
		(Hastelloy)	1000mm(39")	815.844
			1200mm(47")	815.845
			1500mm(60")	815.846
			1800mm(72")	815.847
11	轴套管	Guide sleeve	700mm (27")	815.814
		(FEP)	1000mm(39")	815.815
			1200mm(47")	815.816
			1500mm(60")	815.817
			1800mm(72")	815.818
12	内管	Inner tube	700mm (27")	946.300
		(PTFE)	1000mm(39")	946.801
			1200mm(47")	946.802
			1500mm(60")	946.811
			1800mm(72")	946.812
13	外管	Outer tube	700mm (27")	946.803
		(PTFE)	1000mm(39")	946.804
			1200mm(47")	946.805
			1500mm(60")	946.813
			1800mm(72")	946.814
14	轴套	Pure carbon brush		816.806
15	管轴套座	Carbon brush housing		946.807
16	叶轮（开式）	PTFE impeller		946.808
	高扬程叶轮	High pressure impeller		946.808HP
17	底座	Pump foot		916.809
	高扬程泵底座	High pressure pump foot		916.809HP

YL可调速电机系列 YLVARIABLE SPEED CONTROL MOTOR SERIES

型号 Model	电源 Power
YL	220V/1ϕ/50-60Hz/800W

电机重量(Weight):3.55kg

不适用于输送易燃易爆介质及场合。Do Not Pump Flammable or Explosive Fluids.

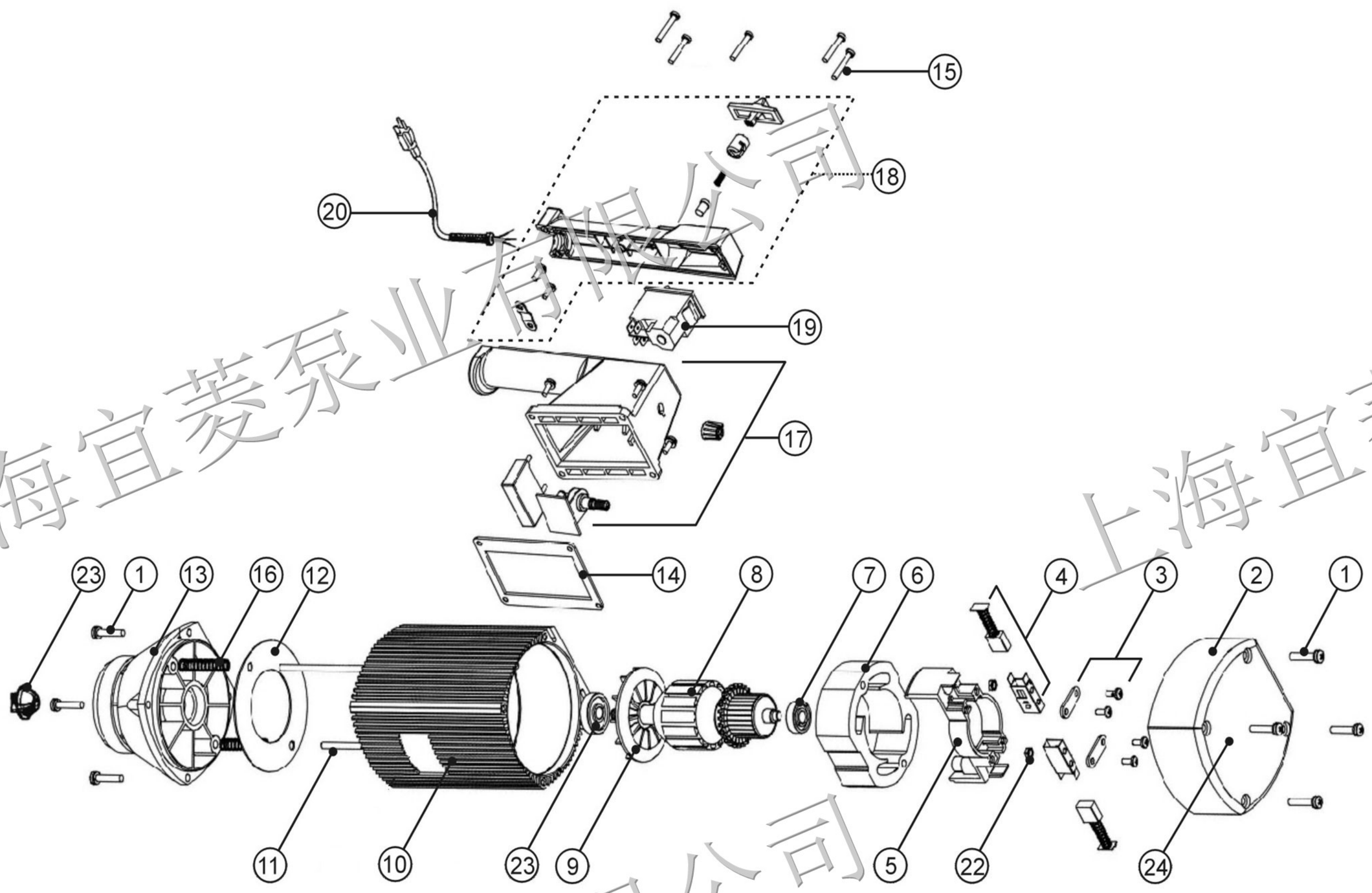

序号 No.	部件名称 Name		配件编号 Part No.	序号 No.	部件名称 Name		配件编号 Part No.
01	上盖/下端盖螺丝	Screw for plastic housing	881.830P	13	电机下端盖	Lower housing	881.800
02	电机上盖	Motor cover	880.800	14	把手垫片	Gasket	881.867
03	十字自攻螺丝组件	Cross screw with gasket	810.840	15	把手螺丝	Screw	881.831
04	碳刷组件	Carbon brush	887.803	16	弹簧	Spring	885.807
05	碳刷架座	Brush holder	885.808	17	调速开关	Speed-control switch	880.805
06	外线圈组	Stator	887.802	18	把手上盖（推杆）	Switch cover	880.802
07	轴承	Ball bearing	881.826	19	电源开关	Power	887.804
08	内线圈组	Armature	887.801	20	电源线	Power cord w/strain relief&plug (含插头)	887.805
09	散热风叶	Fan	885.812	21	轴承	Bearing	883.831
10	电机外壳	Motor housing,plastic	885.810P	22	六角螺母	Hexagon nut	884.848
11	连接杆	Rod connector	885.806	23	电机端联轴器	Motor coupling	883.833
12	下端盖垫片	Guide disc	885.804				

故障排除

故障情形	故障可能原因	故障排除
电机/气动马达停止运动	• 电机电流过载(电机线圈烧毁，无法作动) • 电源是否断路或插头是否脱落 • 马达上下联轴器磨损 • 定子内线圈遭酸气腐蚀，导致无法动作 • 电源接触不良 • 电源的保护开关接触不良	• 进线端加装过载保护器(更换线圈) • 检查电源或重新稳固插头、插座 • 更换联轴器 • 更换内线圈 • 更换插头或插座确保稳固连接 • 检修开关或者更换
电机/气动马达温度太高	• 电流是否太高，使电机超载使用 • 电机用电压不稳定，请加装稳压器或过电流保护开关以防电机过载烧掉 • 液体粘度过高，比重过大，颗粒过大含量过高导致电机运转变慢、重拖	• 查明超载原因，请加装电源稳压器及电流过载保护开关 • 稀释被输送介质的浓度、粘度、比重、颗粒或更换适用的其它泵型
正常运转后，抽液泵突然停止运动	• 是否阻塞或污垢沉积 • 请清除阻塞物或污垢，并确实定期检查 • 是否有异物进入泵浦本体，是否为过滤设备不良或桶槽内掉入其它物质， • 确认液体温度是否过高、材质是否适用	• 清除阻塞物、清理污垢或沉积物 • 请更换滤网、滤心并清除管路及槽内杂质 • 降低被输送液体的温度或更换满足和适用被输送液体的材质之泵型
抽液泵主体有裂痕	• 确认泵体过流材质和被输送液体是否适用 • 出入口管路未确实固定，造成运转时产生震动；请将出入口管路固定妥当， • 并将损坏部份换新。	• 更换能够完全满足或适应被输送液体材质的泵型 • 稳固抽液泵使用时的支撑，尽量减少振幅及不必要的震动
抽液泵无法打出液体(电机可正常运转情况下)	• 检查出入口管路是否异物阻塞或污垢沉积 • 检查叶片是否异物阻塞、磨损、卡死 • 入口液体水位应高于泵管底座约需3公分以上 • 检查抽液泵零件是否紧脱、损坏 • 电机连轴器、泵管连轴器是否磨损、导致空转 • 确认电机是否正常运转	• 清除抽液泵入口处阻塞物及污垢 • 清除叶轮上的缠绕物等异物、叶轮如损坏则更换 • 提高液位 • 检测并上紧叶轮、联轴器、轴套等，如部件已损坏则更换 • 更换联轴器 • 检测接线是否完正确、碳刷长度是否合格
抽液泵工作动时振动大、声音大	• 抽液泵未确实固定或安装不良，使运转时产生震动 • 检查出入口管路是否有异物阻塞或污垢沉积 • 抽液泵长期运转后，轴承磨损或锈蚀 • 碳刷长期使用磨损	• 稳固抽液泵使用时的支撑，检查主轴和轴套间的间隙是否过大，被输送液体的粘度或比重超出泵的应用范围 • 更换轴承、轴套、套管 • 更换碳刷甚至碳刷架
抽液泵管件漏液	• 中间套管，管轴承座磨损 • 中心轴因长期使用导致磨损 • 出液口漏液时，可能为0型环磨损 • 泵管松脱 • 电机连轴器与泵管连轴器损毁	• 更换中间套管或管轴承座 • 更换中心轴、轴套及配套密封件 • 更换O型密封环 • 旋紧泵管(有必要可以加高强度密封胶) • 更换联轴器、检测相联部分
气动马达故障	• 气源尚未开启 • 气动马达转速过低，满载时运行不稳 • 过载引发叶片损坏，长期使用导致叶片磨损	• 开启气源 • 气压不够，提高供气压力，提高供气量 • 更换叶片或更换气动马达

如遇不明故障原因时，请立即并闭电源(气源)，并通知经销商作进一步检查。

TROUBLESHOOTING

SYMPTOM	POSSIBLE REASONS	TROUBLESHOOTING
The electric/pneumatic motor stops running	• IThe motor current is overloaded (the motor cannot be actuated because its coil is burnt) • IWhether the power is disconnected or the plug falls • IUpper and lower couplings of the motor are worn out • IThe stator's inside coil is eroded by acid gases, resulting in failure of action • IThe power supply contact is poor • The power supply's protection switch contact is poor	• IMount an overload protector at the power lead end (change the coil) • ICheck the power supply or fix the plug and the outlet again • IReplace the coupling • IReplace the inside coil • IReplace the plug or the outlet to ensure secure connection • Overhaul the switch or replace it
The electric/pneumatic motor is overheated	• IWhether the current is so high that the motor is overloaded in running • IThe motor's working voltage is not stable; please mount a voltage stabilizer or an overcurrent protection switch to prevent the motor from being overloaded and burnt • The motor's running is slow and heavy because of the liquid's too high viscosity and excessive specific gravity plus too big grains and an excessive content of grains	• IFind out reasons for overload; please mount a power supply voltage stabilizer and an overcurrent protection switch • Dilute the working medium's concentration, viscosity, specification or grain or replace it with another pump type
The liquid pump stops running suddenly after normal starting	• IWhether it is jammed or has filth deposits • IPlease remove jams or filth and make sure of periodic checks • IWhether there are any foreign matters inside the pump body and whether the filtering device fails or any other matters fall into the drum tank • Confirm whether the liquid temperature is too high and whether the material is applicable	• IRemove jams, filth or deposits • IPlease replace the sieve and the filtering element and remove impurities inside the pipeline and the tank • Reduce the working liquid's temperature or replace it with a pump type meeting and applying to the material of the working liquid
There are cracks on the liquid pump's body	• IConfirm whether the pump body's flow-through material and the working liquid are applicable • IThe outlet and inlet pipelines are not fixed securely, resulting in vibrations during running; please fix such pipelines properly • And replace the damaged parts with new ones.	• IReplace it with a pump type fully meeting or applying the material of the working liquid • Fix the support for use of the liquid pump to reduce the amplitude and unnecessary vibrations as much as possible
The liquid pump cannot pump out any liquid (when the motor can run normally)	• ICheck whether the outlet and inlet pipelines are jammed by foreign matters or have filth deposits • ICheck whether the blades are jammed by foreign matters, worn out or seized • IThe inlet liquid level shall be about more than 3cm higher than the pump pipe base • ICheck whether any part of the liquid pump is loosened or damaged • IWhether couplings of the motor or the pump pipe are worn out to result in idle running • Confirm whether the motor runs normally	• IRemove jams and filth at the liquid pump's inlet • IRemove foreign matters on the impeller, like entanglements, and replace the impeller if damaged • IIncrease the liquid level • ICheck and tighten impellers, couplings, bushings and the like, and replace couplings if the parts are damaged • Check whether the connection is completely right and whether the carbon brush length is acceptable
There are violent vibrations and loud noise during running of the liquid pump	• IThe liquid pump is not fixed securely or installed properly so as to result in vibrations in running • ICheck whether the outlet and inlet pipelines are jammed by foreign matters or have filth deposits • IThe bearings are worn out or rusty after long-term operation of the liquid pump • The carbon brush is worn out after long-time service	• IFix the support for use of the liquid pump, and check whether there is an excessive clearance between the main shaft and the bushing and whether the working liquid's viscosity or specific gravity exceeds the pump's application scope • IReplace bearings, bushings and sleeves • Replace the carbon brush and even the carbon brush yoke
The liquid pump's pipe fittings leak	• IThe intermediate sleeve and the pipe shaft seat are worn out • IThe central shaft is worn out because of long-time service • IMaybe the O-ring is worn out when the liquid discharge port leaks • IThe pump pipe is uncoupled • The couplings of the motor and the pump pipe are damaged	• IReplace the intermediate sleeve or the pipe shaft seat • IReplace the central shaft, the bushing and the related sealing element • IReplace the O-ring • ITighten the pump pipe (enhance the strength sealant when necessary) • Replace the couplings and check related parts
The pneumatic motor fails	• IThe gas supply is not started yet • IThe pneumatic motor's rotation speed is so low as to result in instability in full-load running • Overload results in damages to the blades, and the blades are worn out for long-time service	• IStart the gas supply • IThe pneumatic pressure is inadequate, so it's necessary to increase the gas supply pressure and the gas supply • Replace the blades or the pneumatic motor

If the fault reasons are uncertain, please cut off the power (gas) supply immediately and notify your distributor for further check.

产品概述

YL系列插桶抽液泵是我公司引进欧美技术开发的一种新型产品，具有技术先进，性能稳定，操作方便，质量可靠、性价比高等诸多优点。为了保证产品的品质，我们产品的关键部件均采用原装进口零件：深沟球轴承、氟橡胶骨架油封，轴套分别采用瑞士、日本、台湾的产品，生产的每个主要部件均有公司注册商标的印记logo,以确保产品的纯正度及质量的可靠性，有效保护我们的产品的高可靠性和耐用性。公司拥有完善的成套测试平台，对所有产品都进行性能测试，只有通过了性能测试的泵和电机才能出厂，产品100%进行测试，可以满足您对高品质产品的要求，是目前国内唯一可以替代进口桶泵产品的理想选择。电机采用国内技术领先的无级可调速电机，具有噪声低，冲击小的优点，并配有过热保护装置，防止电机因过载而烧毁电机，从而保证了泵机的高可靠性和耐用性。泵体与电机采用螺纹式法兰安装盘，拆装的时候无须任何工具，这样维护和保养就非常方便了。

YL-EX（SB-3）防爆型产品适用于隔爆能力达.IIB级，引燃温度不低于T4组的易燃易爆作业场所，具有安全可靠、结构合理、工艺先进、高效、维修方便等特点。本产品符合国际GB3836.1-83《爆炸性环境用防爆电气设备通用要求》和GB3836.2-83《爆炸性环境用防爆电气设备隔爆型电气设备“d”》和GB3883.1-83《手持式电动工具的安全》的规定。

上列产品经防爆检验站3836.2-83《爆炸性环境用防爆电气设备隔爆型电气设备“d”》标准进行了严格检测，结果符合工厂用隔爆型（dII-BT4）设备的规定。

■安全性

无泄漏：泵管无泄漏设计，更适合腐蚀性，易燃易爆的液体输送。

过载保护：调速电机配有过载保护装置。

■经济实用性

轻便：泵管和马达总重量在4-10KG，易于携带，移动。

快捷：2-3分钟可以清空一个200L标准桶。

无轴封：无泄漏结构，不需要使用机械密封，降低维护、维修成本。

■通用性

多种材质：聚丙烯，PVDF，PTFE，不锈钢，铝合金材质，适用于绝大部分低粘度到中等粘度液体的输送，可以满足80%以上的应用。现有 YL-AL, YL-SS304, YL-SS316L, YL-PPHT, YL-PVDF, YL-PTFE等型号。

多种驱动方式：电动或气动驱动，满足不同动力源。

■易用性

人性化设计：符合人体工学的外形设计，更易操作者使用。

适用性强：可以输送普通介质到各类强酸强碱，及易燃易爆液体。

接口方便：标准G1"螺纹出口，适合连接各类接头。

改进型联轴器：安装无需对中，连接只需数秒钟。

快速接口：马达与泵管采用快速接口，拆装自如。

整体快拆式结构：拆卸和装配无需辅助工具。

配件丰富：齐全的配件，满足不同的需求。

■可靠性

100%通过测试：每台泵出厂前都通过严格的性能测试。

可以干运转：自润滑轴承可以短时间干转而不损坏泵管。

模块化结构：零部件高度集成，便于拆卸和维修。

■高效性

高性能叶轮：高性能双吸叶轮兼顾大流量，高扬程。

结构简单：易拆洗，10分钟内完成拆卸和装配。

■环保性

无泄漏：不会污染环境。